Building Services
Room 201
City-County Building
300 West Ash · P.O. Box 736
Salina, Kansas 67402-0736

City of Salina

TELEPHONE · (785) 309-5715
FAX · (785) 309-5713
TDD · (785) 309-5747
E-MAIL · building.services@salina.org
WEBSITE · www.ci.salina.ks.us

RESIDENTIAL DETACHED BUILDINGS

(Garages and Sheds Over 120 Sq. Ft.)

Size of new building _____x_____

Roof Covering:_____

Roof Pitch:_____" in 12"

Roof Underlayment_____

Roof Sheathing_____" Plywood or OSB

Roof framing (Check one below)

[ ] Trusses_____" on center

[ ] Rafters- 2" x ___" on ___" centers

Joists— 2"x____"on ____" centers

Walls: 2"x____"x_____" on ____" centers

Wall Sheathing: _____" plywood or OSB

Overhead door: Size

Located in gable end—Yes____ No____

Headers: Double 2"x____" over windows and doors

Double 2"x____" x____" over garage door

Siding: _____

Slab: 4" concrete floor—12"thick by 12"wide at edges With 6x6x10 reinforcing mesh. (Limited to buildings of not More that 400 square feet. Over 400 square feet, footings Must be at least 30" below grade level.)

Anchor bolts: ½ " diameter bolts maximum 6' on center and within 12" of edges, at least 2 bolts per plate. 7" minimum embed.

Wall Bracing: See note on sample floor plan below. (N.T.S)

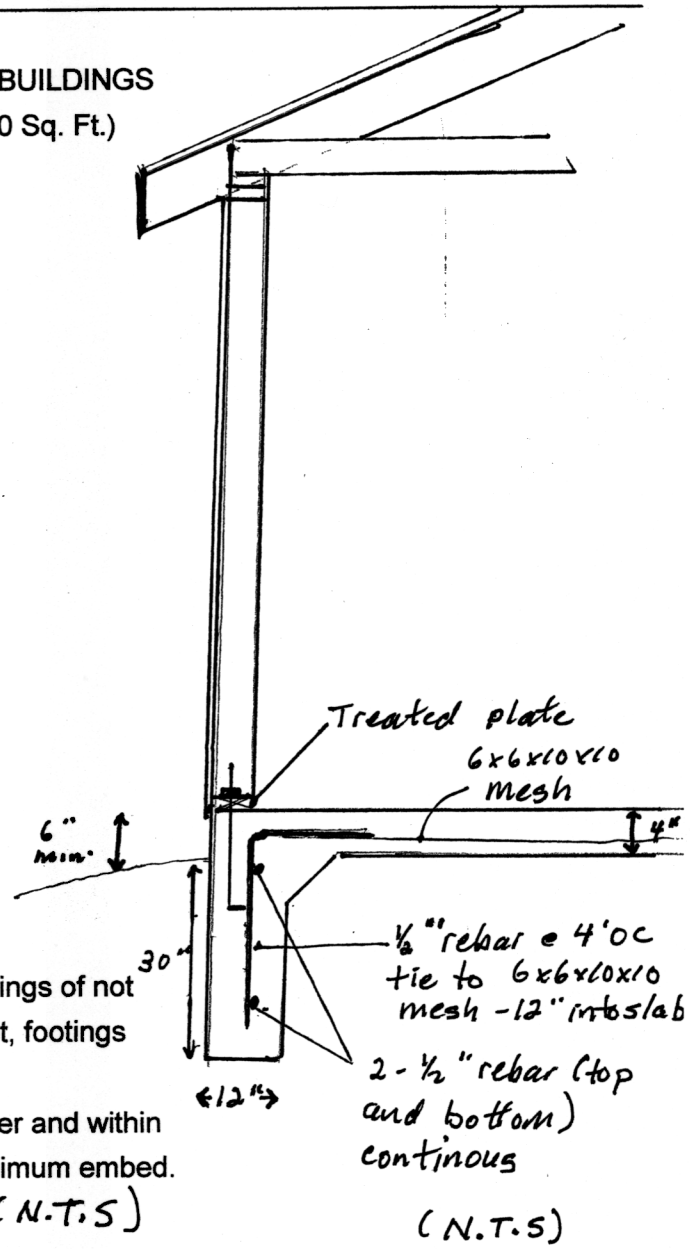

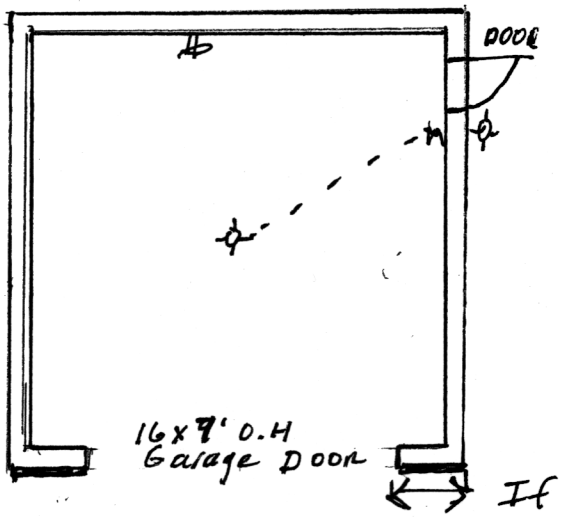

If this is less than 4', verify bracing requirements with Building Services Dept.