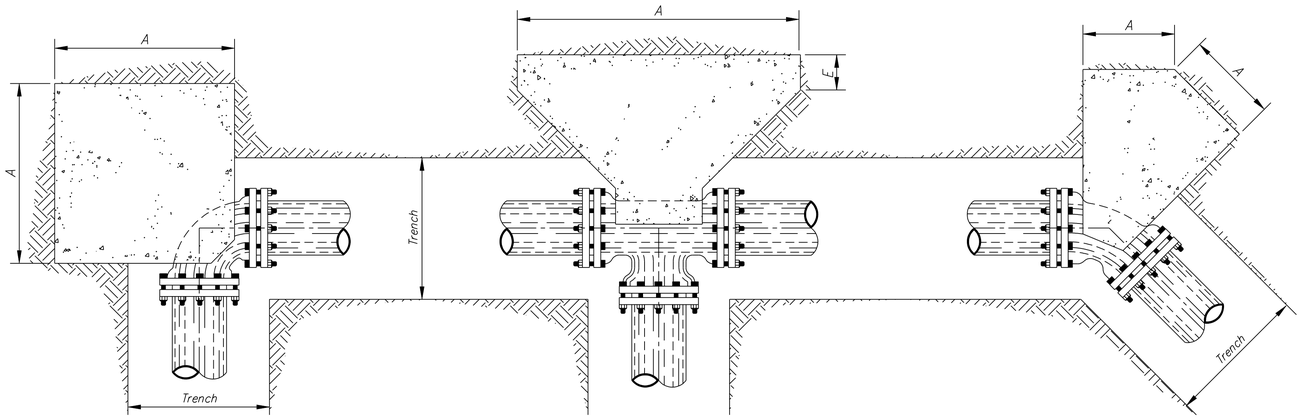

PLAN

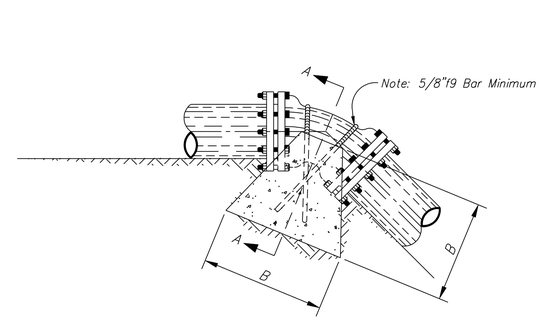

ELEVATION

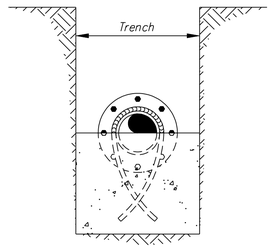

SECTION A–A

VERTICAL BLOCKING DETAILS

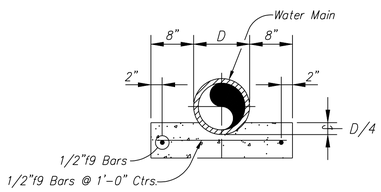

Note: All Dimensions Are Minimum.

TYPICAL CONCRETE PIPE CRADLE

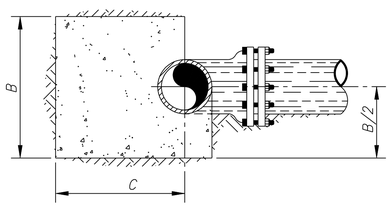

SECTION

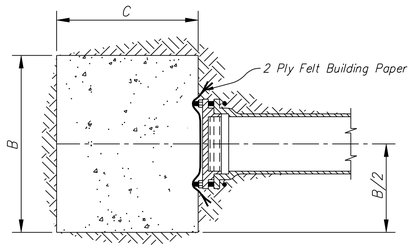

TYPICAL BLOCKING FOR CAST IRON PLUG

TYPICAL BLOCKING DETAILS

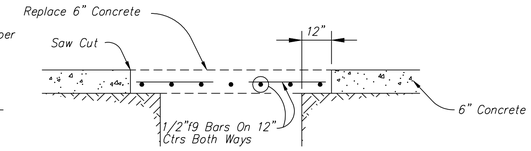

DETAIL "C"

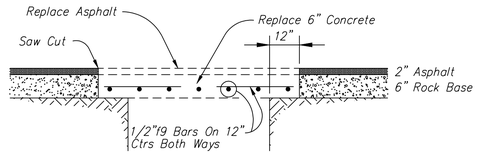

DETAIL "A"

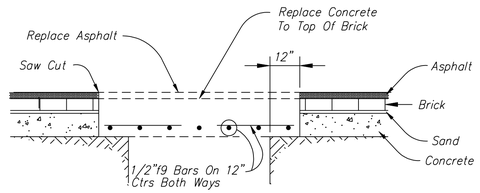

DETAIL "D"

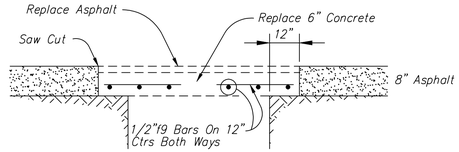

DETAIL "B"

Reinforcing Steel To Be Incidental To Patching & Shall Not Be Considered An Extra Pay Item.

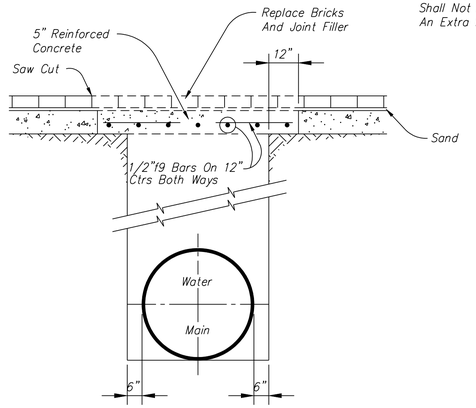

DETAIL "E"

PAVEMENT CUTTING DETAILS

BLOCKING SCHEDULE
WATER DISTRIBUTION FITTINGS

PIPE	TEES & PLUGS					90° BEND			45° BEND			22.5° BEND		
"D"	A	B	C	D	E	A	B	C	A	B	C	A	B	C
4	16	12	16	6	12	16	12	16	16	12	16	16	12	16
6	18	12	18	6	16	18	12	18	18	12	18	18	12	18
8	24	16	24	8	16	24	16	24	24	16	24	24	16	24
10	30	20	30	8	16	30	20	30	30	20	30	30	20	30
12	36	24	36	10	18	36	24	36	36	24	36	36	24	36
16	48	32	48	10	18	48	32	48	48	32	48	48	32	48
20	60	40	60	12	18	60	40	60	60	40	60	60	40	60
24	72	48	72	12	18	72	48	72	72	48	72	72	48	72
30	96	64	72	18	18	96	64	72	96	64	72	96	64	72

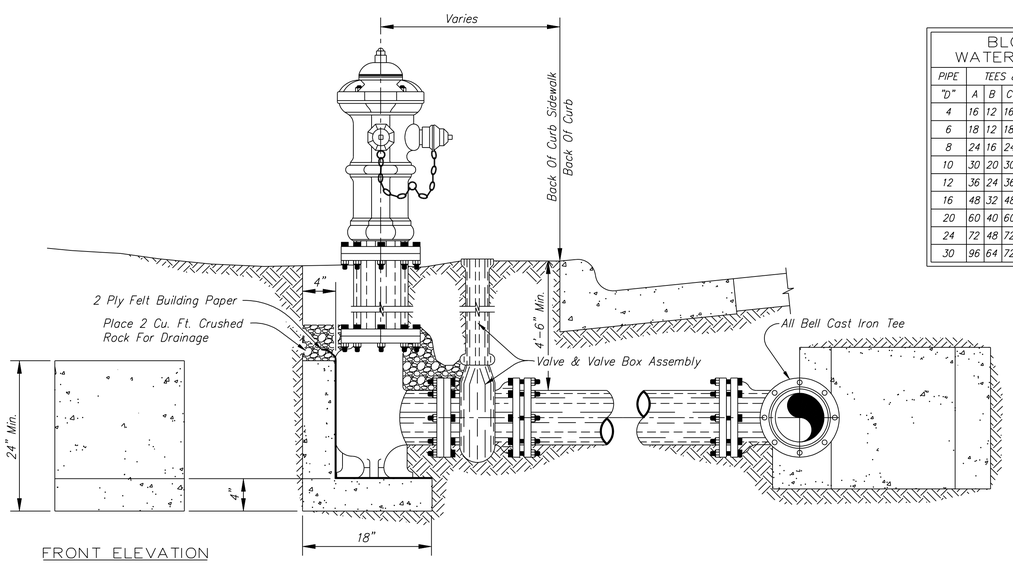

FRONT ELEVATION

FIRE HYDRANT SETTING DETAILS

GENERAL NOTES

1. Water Lines Shall Have A Minimum Cover Of 4'-6" Or More As Shown On Profiles.
2. All Valves On Mains & Fire Hydrant Leads Shall Be Installed With Valve Box Assemblies.
3. The Size Of Valve Box Assembly To Be Installed Shall Be Determined By The Type And Size Of Valve.
4. Valve Box Caps Shall Have The Word "water" Cast In The Top.
5. Parallel Potable Water Pipes And Gravity Sanitary Sewers Shall Be In Separate Trenches With A Minimum Horizontal Spacing Of At Least 10 Feet Measured From Edge To Edge. The Sewer Line Material Is To Be PVC With The Ends For Joining As Outlined In KDHE's "Policies, General Considerations And Design Requirements For Public Water Supply Systems In Kansas."

NO.	REVISIONS	DATE	BY	NO.	REVISIONS	DATE	BY

PROJECT TITLE:

STANDARD DETAILS – WATER DISTRIBUTION

FEB 8, 2005

CITY OF SALINA
Dept. of Public Works
Engineering Division
300 WEST ASH SALINA, KANSAS 67401
PH: 785.309.5725 FAX: 785.309.5713

DESIGN:	DATE:	PROJ. NO.:	SCALE: Not to Scale
DRAWN:	FILENAME:		SHEET: OF:

E2AX36.DWG 11/09/95

...\wd2a.dwg 03/03/2006 07:37:15 AM