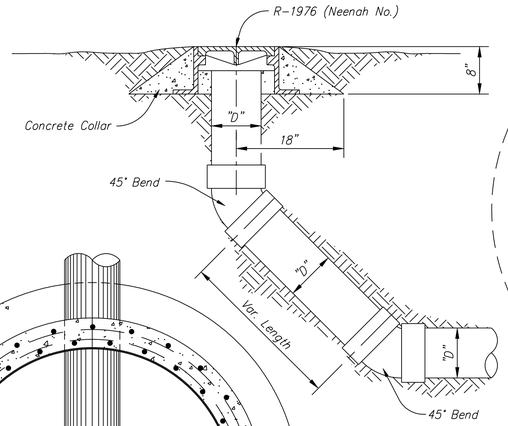

TEMPORARY SANITARY SEWER CLEANOUT

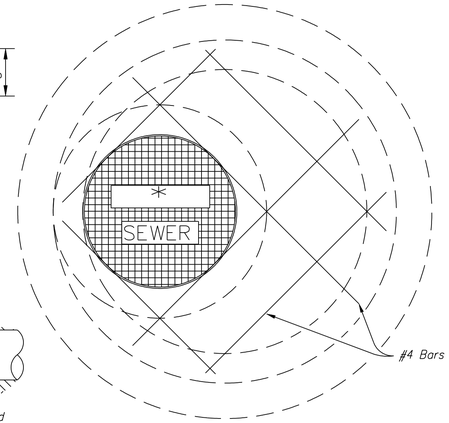

PLAN

SUMMARY OF MANHOLES				
STATION	NO.	℄	TYPE	"D"

STREET MANHOLE RING & COVER:

Street MH Ring 170 Lb. Min.
Cover 110 Lb. Min

Street Manhole Ring & Cover to be Machined.

GENERAL NOTE:

Precast Manholes Shall Conform to ASTM Specification C 478-70, with Revisions.

* SANITARY OR STORM SEWER

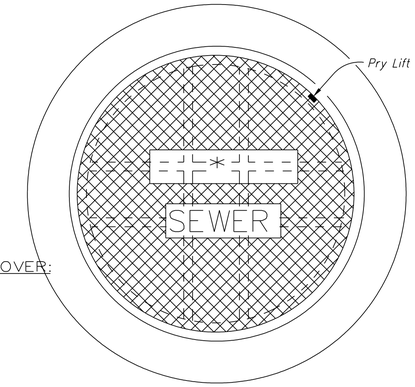

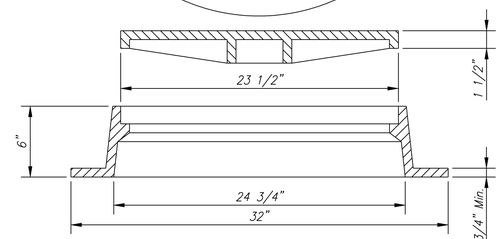

STANDARD MANHOLE RING & COVER

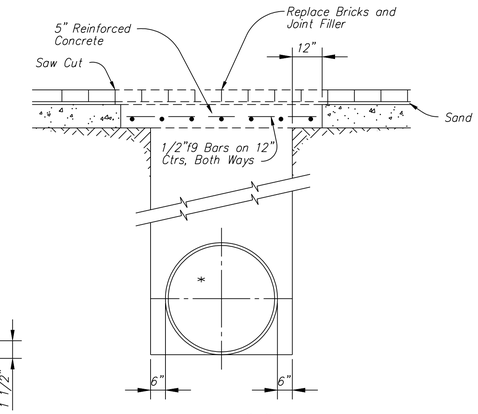

DETAIL "E"

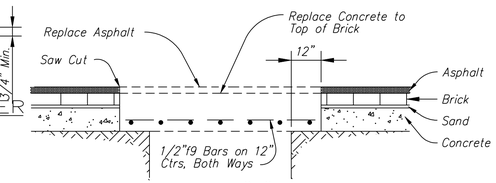

DETAIL "D"

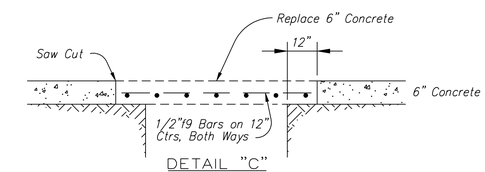

DETAIL "C"

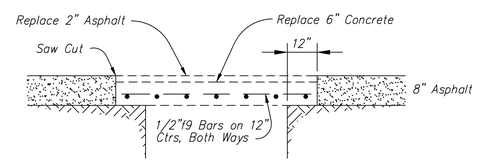

DETAIL "B"

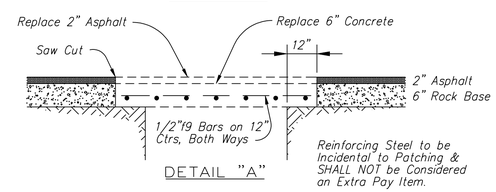

DETAIL "A"

Reinforcing Steel to be Incidental to Patching & SHALL NOT be Considered an Extra Pay Item.

PAVEMENT CUTTING DETAILS

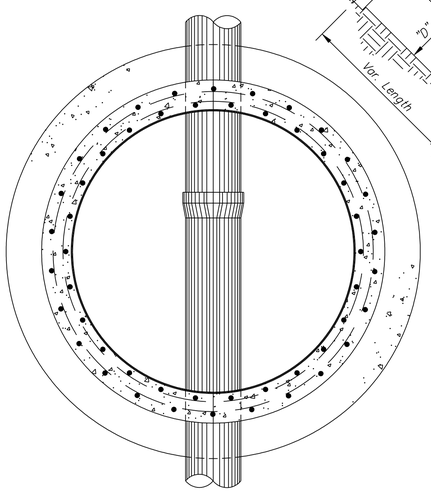

SECTION A-A

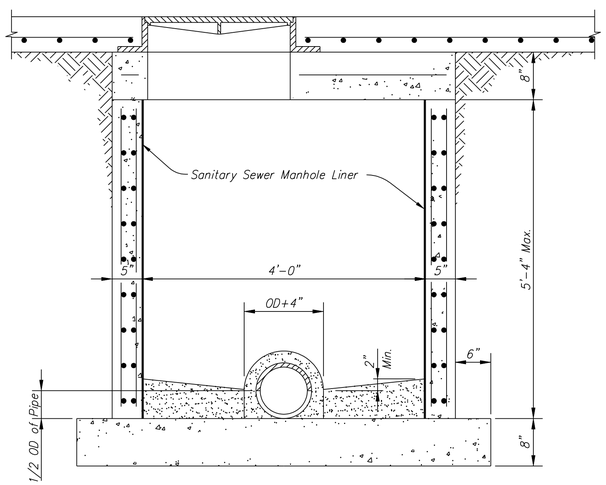

DETAIL OF SHALLOW MANHOLE - TYPE " "

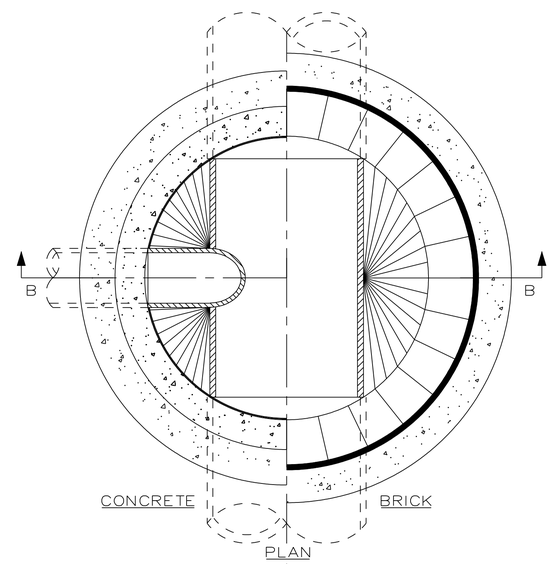

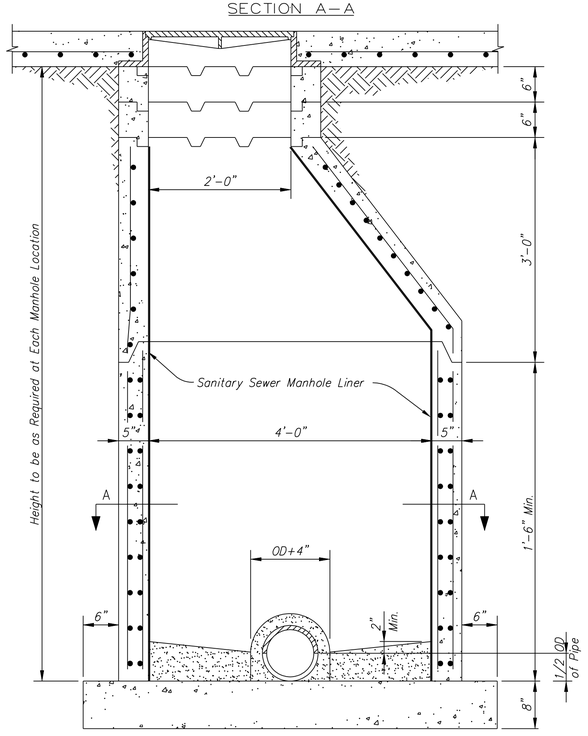

DETAIL OF STANDARD MANHOLE - TYPE " "

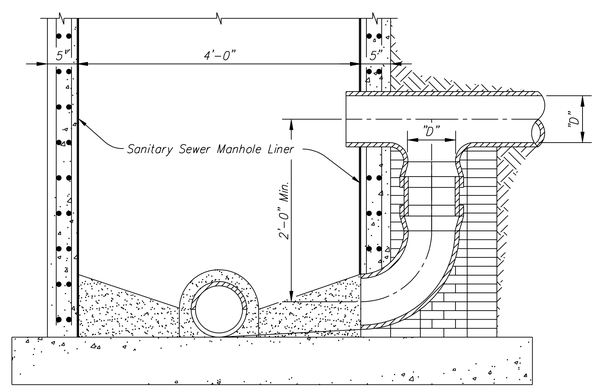

DETAIL OF DROP MANHOLE

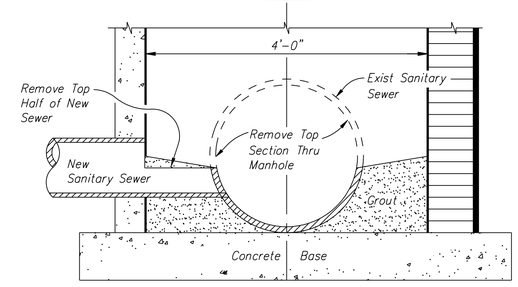

SECTION B-B

NEW SEWER CONNECTION

(Manhole Connected over Exist SS Main)

Note: All structures within roadway shall be backfilled with non-excavatable flowable fill mix, 95%.

STANDARD DETAILS-
SANITARY/STORM SEWER

CITY OF SALINA
Dept. of Public Works
Engineering Division

300 W. Ash St. SALINA, KANSAS 67401
PH: 785.309.5725 FAX: 785.309.5713

PROJECT NO.:	DATE:	SCALE:	FILENAME:
DESIGN BY:	DRAWN BY:	APPROVED:	SHEET 1 OF

E24X36.DWG 11/09/95

FEB 8, 2005

...\sstdtls.dwg 03/03/2006 07:35:23 AM